SPEC SHEET

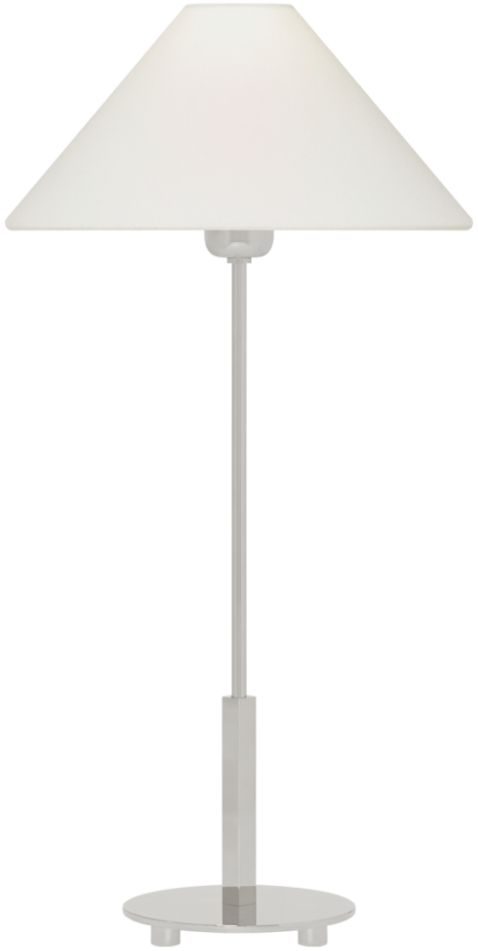

# Hackney 24" Cordless Buffet Lamp

Item # SP 3021PN-L-CL

Designer: J. Randall Powers

Height: 23.5"
Width: 11.5"
Base: 6" Round
Finishes: BZ, HAB, PN
Shade Treatments: L
Shade Details: 3" x 11.5" x 7"
Lightsource: Rechargeable LED w/ Touch Dimmer
Wattage: 2w (60 - 250lm)
Weight: 4 Pounds
Note: UL Only | Rechargeable Custom LED Lightsource Included

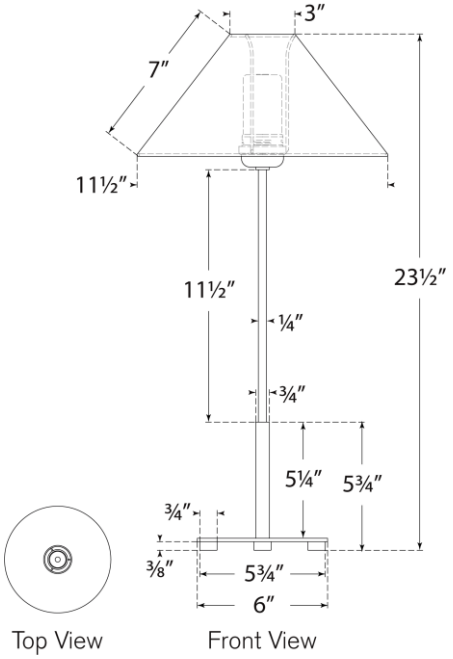


VISUAL COMFORT & CO.

LED